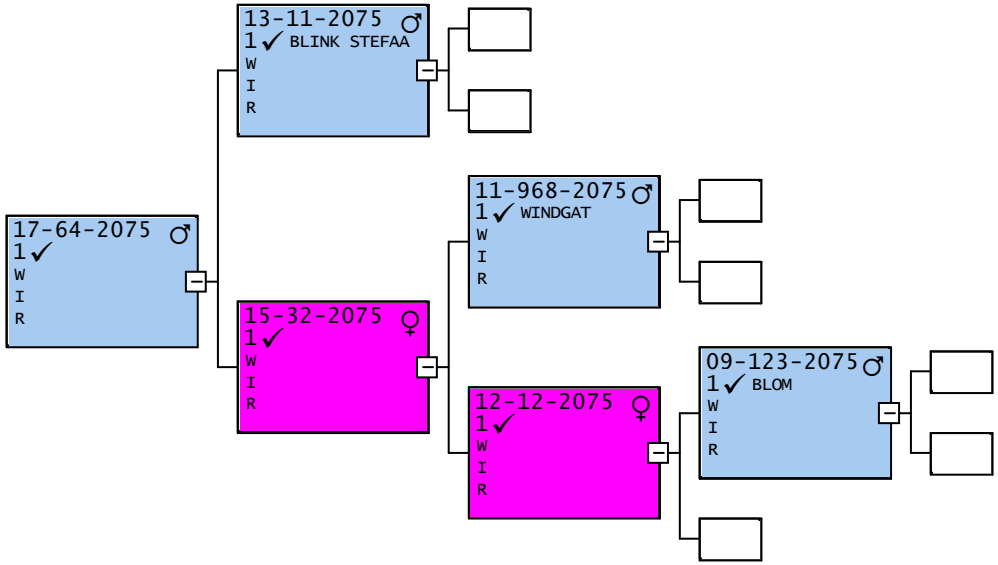
17-64-2075 ♂
1 ✓
W
I
R
13-11-2075 ♂
1 ✓ BLINK STEFAA
W
I
R
15-32-2075 ♀
1 ✓
W
I
R
11-968-2075 ♂
1 ✓ WINDGAT
W
I
R
12-12-2075 ♀
1 ✓
W
I
R
09-123-2075 ♂
1 ✓ BLOM
W
I
R